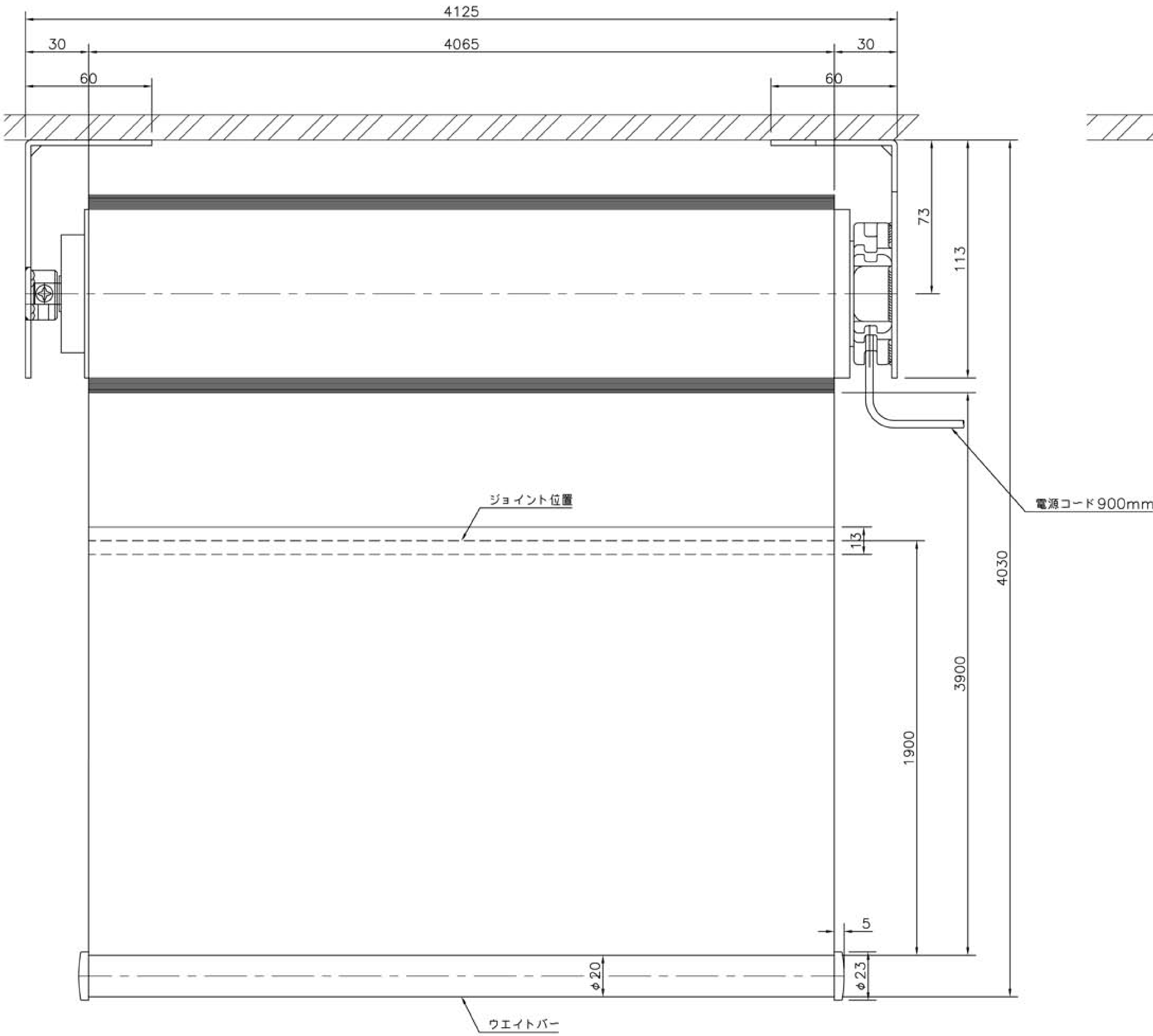

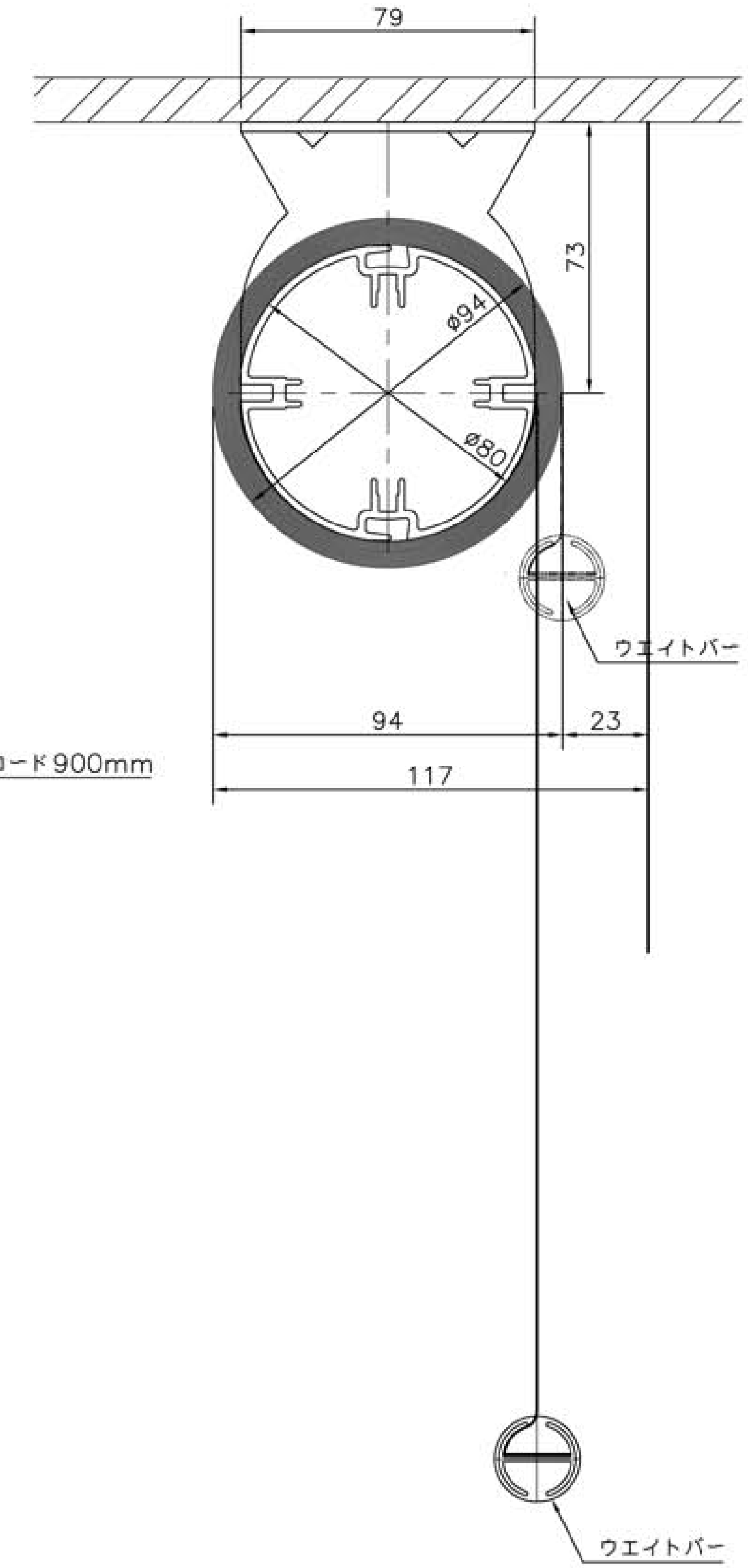

Theater house	殿	SALES	DATA	SCALE	
	殿	DRAWING	DATA	NO.	